PART NUMBER APH-24752

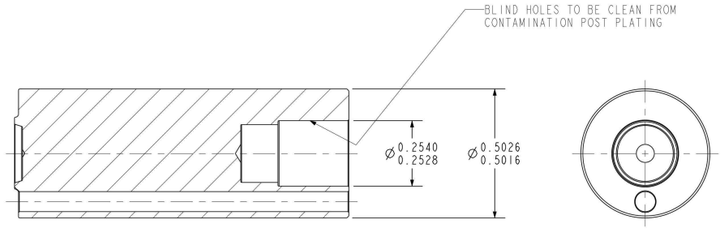

SECTION A-A
SCALE 3.000

NOTES

1. ELECTROLESS NICKEL (RACK) PLATE 12-15 MICRONS [0.0005-0.0006"] THICK PER ISO 4527-Fe//NiP [5-9%]12//.
2. DIMENSIONS SHOWN ARE POST PLATE.
3. PARTS TO BE HANDLED WITH CARE TO AVOID DAMAGE INCLUDING DENTS/NICKS.

IND.	PART NO.	DESCRIPTION	MATERIAL	QTY.	WT.(g)
1	H-24752	ARMATURE		1	0.2

ASSEMBLY WEIGHT (g) : ---

USED ON: D12-2331, D12-2332, D12-2333, D12-2333, D12-2334, D12-2335

REF. APH-24765

3RD ANGLE PROJECTION

UNLESS OTHERWISE SPECIFIED

√ Ra93	√ Rmax600	EN-22768-mK TOLERANCE LEVELS
0.005TIR	ALL DIA.	RADIUS OR CHAMFER ACCEPTABLE
Ø 0.004TIR	ALL DIA.	BREAK ALL EDGES 0.010 MAX
UNITS: INCH		SMOOTH FINISH FOR APPEARANCE ONLY

REV.	DESCRIPTION	DATE	APPR.
---	PRODUCTION RELEASE	19-AUG-18	R.D.

DRAWN BY: C. MCNAMARA 04-JUL-18
CHECKED BY: D. HANNIFY 19-AUG-18
APPR. BY: R.DEVITT 19-AUG-19

LISK
LISK IRELAND Ltd., Ennis Rd., Gort, Co. Galway.

NOTICE
THIS DRAWING EMBODIES A CONFIDENTIAL PROPRIETARY DESIGN ORIGINATED BY LISK IRELAND LTD. AND ALL DESIGN, MANUFACTURING, REPRODUCTION, USE AND SALE RIGHTS REGARDING THE SAME ARE EXPRESSLY RESERVED. IT IS SUBMITTED UNDER A CONFIDENTIAL RELATIONSHIP FOR A SPECIFIC PURPOSE, AND THE RECIPIENT AGREES BY ACCEPTING THIS DRAWING NOT TO SUPPLY OR DISCLOSE ANY INFORMATION REGARDING IT TO ANY UNAUTHORIZED PERSON, OR TO INCORPORATE IN OTHER PROJECTS ANY SPECIAL FEATURES PECULIAR TO THIS DESIGN. ALL PATENT RIGHTS HERETO ARE EXPRESSLY RESERVED BY LISK IRELAND LTD., ENNIS RD., GORT, CO. GALWAY.

DESCRIPTION: PLUNGER, PLATED
PART NO. APH-24752 REV. ---
SIZE A3 | SCALE: 6.000 DO NOT SCALE | SHEET 1 OF 1

PART NUMBER: H-24752

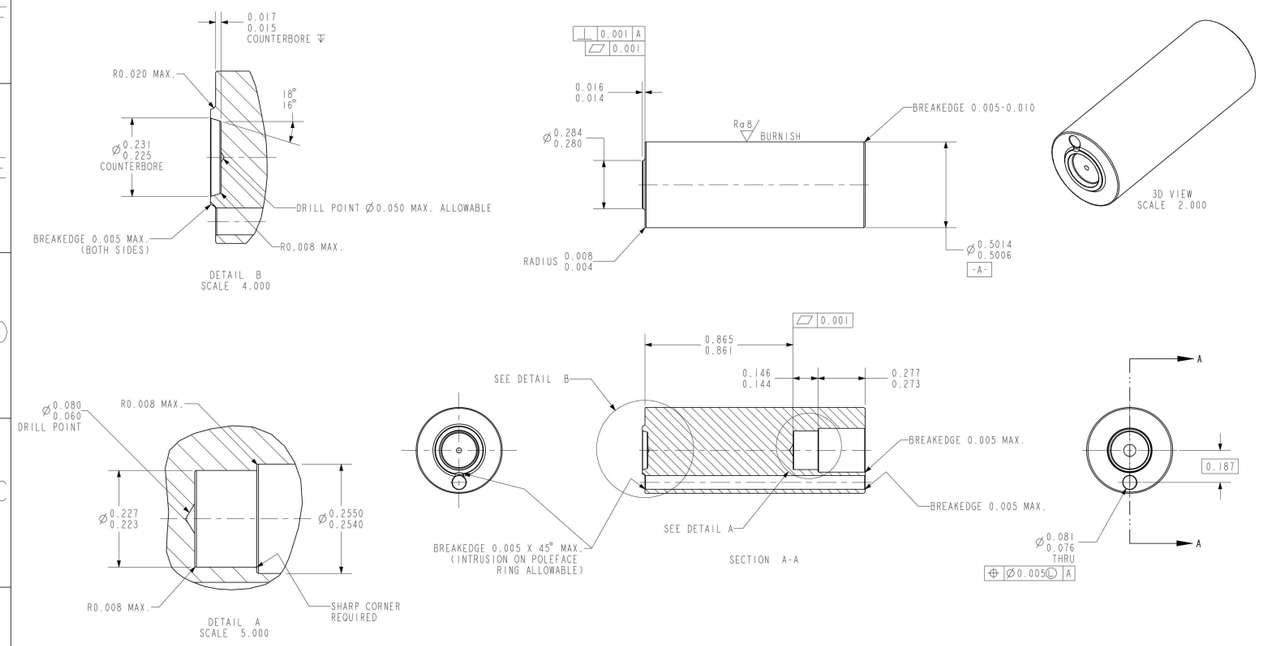

NOTES

1. MATERIAL: 11SMn37, 230M07 OR 12L15 COLD DRAWN STEEL PER LISK ENGINEERING SPECIFICATION EM110. SPECIFIC REQUIREMENTS APPLY. SUBSTITUTION OF ANY OTHER MATERIAL WILL RESULT IN REJECTION OF PARTS. CANNOT BE LEADED STOCK.
2. NO DENTS, BURRS OR SCRATCHES SHOULD EXIST ON EXTERNAL SURFACES OF COMPONENT.

NOTICE
THIS DRAWING EMBODIES A CONFIDENTIAL PROPRIETARY DESIGN ORIGINATED BY LISK IRELAND LTD. AND ALL DESIGN, MANUFACTURING, REPRODUCTION, USE AND SALE RIGHTS REGARDING THE SAME ARE EXPRESSLY RESERVED. IT IS SUBMITTED UNDER A CONFIDENTIAL RELATIONSHIP FOR A SPECIFIC PURPOSE, AND THE RECIPIENT AGREES BY ACCEPTING THIS DRAWING NOT TO SUPPLY OR DISCLOSE ANY INFORMATION REGARDING IT TO ANY UNAUTHORIZED PERSON, OR TO INCORPORATE IN OTHER PROJECTS ANY SPECIAL FEATURES PECULIAR TO THIS DESIGN. ALL PATENT RIGHTS HERETO ARE EXPRESSLY RESERVED BY LISK IRELAND LTD., ENNIS RD., GORT, CO. GALWAY.

REV.	DESCRIPTION	DATE	APPR.
A	UPDATED PER ECN#-24752REVA. R0.020 MAX. WAS R0.008 MAX. REMOVED DIMENSION Ø0.210-0.208 REFFERING TO COUNTERBORE. CORRECTION OF ERROR.	07-SEP-18	R.D
---	PRODUCTION RELEASE	17-AUG-18	R.D.

DRAWN BY: S. KEIGHREY 23-May-17
CHECKED BY: D. HANNIFY 20-JUN-18
APPROVED BY: R. DEVITT 10-OCT-18

MATL:	EM-110 (SEE NOTE #1)	USED ON:	D12-2330, D12-2331, D12-2332, D12-2333, D12-2334, D12-2335
HEAT:	---		
FINISH:	---	REF.	---
WEIGHT:	---		

3RD ANGLE PROJECTION

UNLESS OTHERWISE SPECIFIED

√ Ra93	√ Rmax600	EN-22768-mK TOLERANCE LEVELS
0.005TIR	ALL DIA.	RADIUS OR CHAMFER ACCEPTABLE
0.004TIR	ALL DIA.	BREAK ALL EDGES 0.010 MAX
UNITS: INCH		SMOOTH FINISH FOR APPEARANCE ONLY

LISK
LISK IRELAND Ltd., Ennis Rd., Gort, Co. Galway.

DESCRIPTION: ARMATURE
PART No. H-24752 REV. A
SIZE A3 | SCALE: 2.000 DO NOT SCALE | SHEET NO. 1 of 1