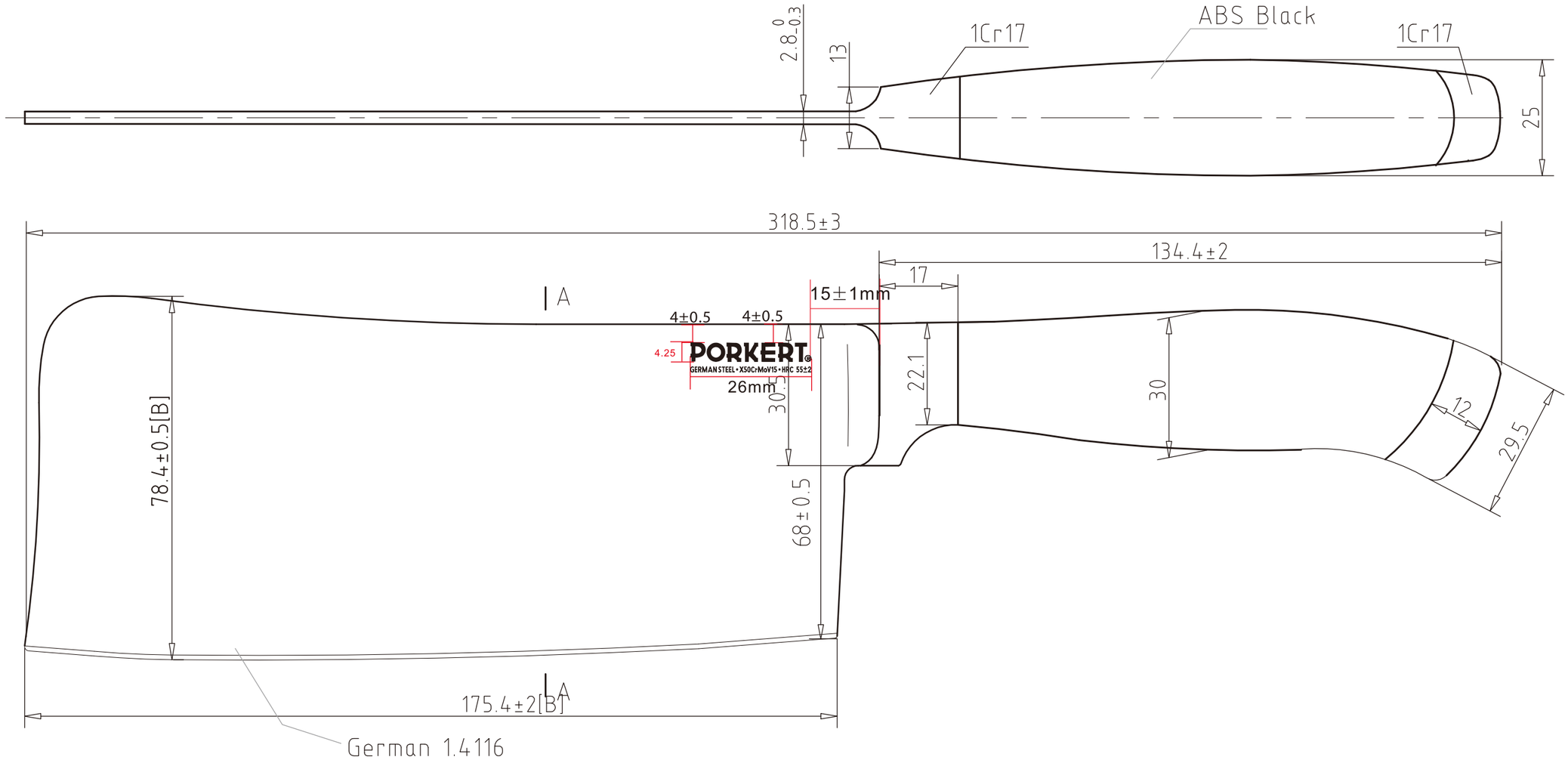

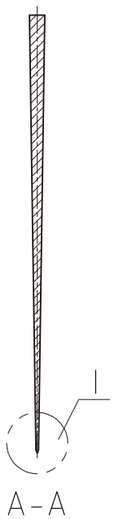

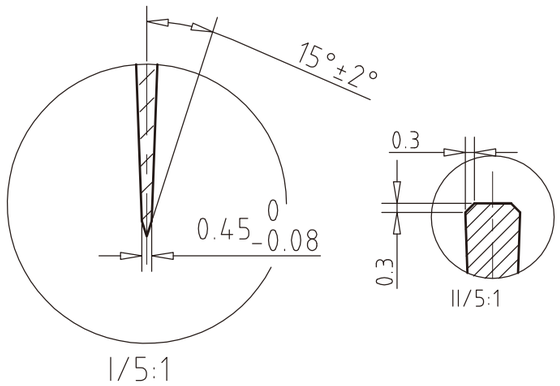

Tolerance unless otherwise specified

0-3mm ±0.5

>3-30mm ±1

>30-120mm ±1.5

>120mm ±3

The part of knife	Material	Product identification	
Blade	ISO 1.4116 - German Stainless steel; HRC 55±2; Taper grinding, stone finishing	Drawing no.	TCP-005
Bolster	GB/T 1Cr17	Description	7"Cleaver 6.06.2021
Rivet	GB/T 1Cr13	Scale	1:1
Handle	ABS black; satin finish	Date	
Stains , chips, burrs, cracks and scratches are not allowed. Inspection will be with AQL Cr 0/Maj 2.5/ Min 4.0 level II, accord. ISO 2859-1			
The product is produced an tested according to the standard ISO 8442-5:2004			