Spulendaten / *coil data*: (7)

Spulentyp / *coil type*: Backlackspule / *baked varnish coil*
Drahtmaterial / *wire material*: Kupfer / *copper*
Spannung / *voltage*: 11,45 VDC
Leistung / *power*: 4,12 Watt
Widerstand / *resistance*: 31,8 ± 3% Ω
Strom / *current*: 0,36 A
Drahtnenndurchmesser / *nominal diameter of wire*: 0,375 mm
Windungszahl / *number of turns*: 987
Amperewindungen / *ampere-turns*: 355
Isolierstoffklasse / *class of insulation*: H (180 °C)

Spule muss Hochspannungstest nach VDE 0580 - 1 s bei 1000 V bestehen
(Spule hat direkten Kontakt zu Stahlgehäuse)
/ coil *must pass high voltage test VDE 0580 - 1 s at 1000 V*
(coil is directly in contact with steel housing)

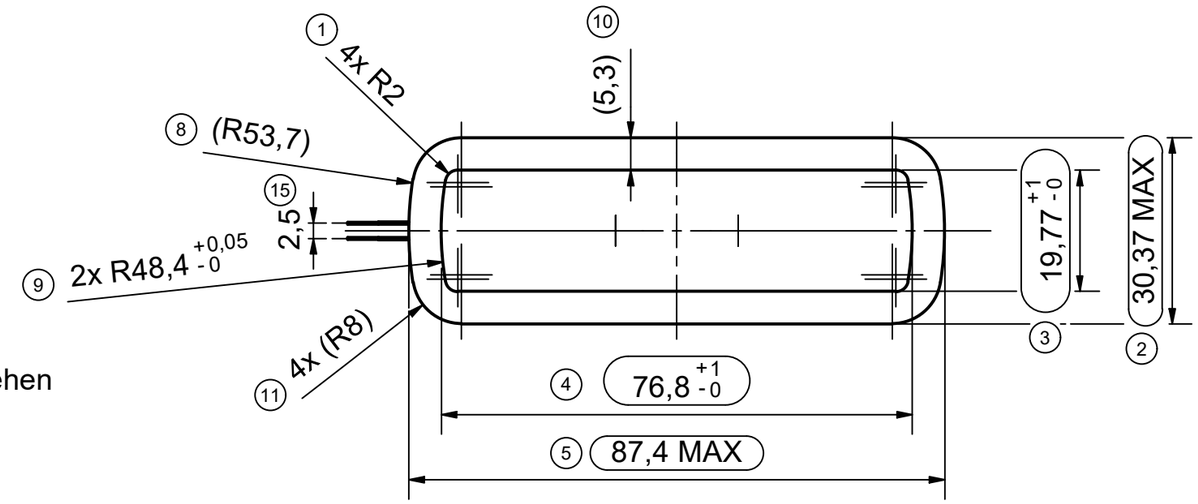

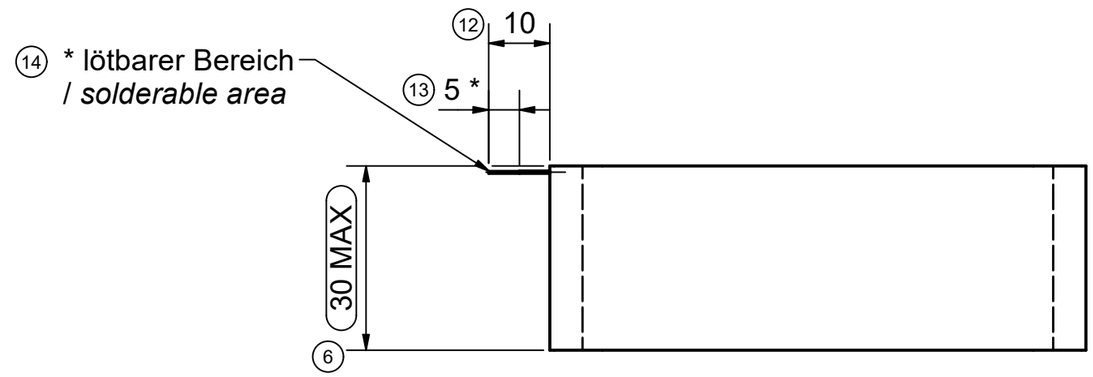

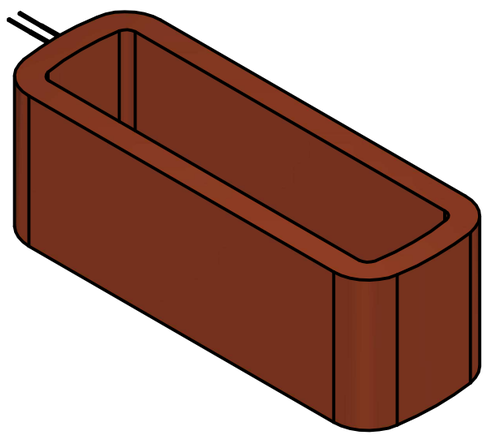

GENERAL TOLERANCE DIN ISO 2768						
LINEAR DIMENSIONS mm	< 0,5	0,5 - 3	3 - 6	6 - 30	30 -120	120 -400
	± 0,1	± 0,1	± 0,1	± 0,2	± 0,3	± 0,5
EXTERNAL RADIUS AND CHAMFER HEIGHTS	< 0,5	0,5 - 3	3 - 6	6 - 30	30 -120	120 -400
	± 0,1	± 0,2	± 0,5	± 1,0	± 2,0	± 4,0
ANGULAR DIMENSIONS	up to 10	10 - 50	50 -120	120 -400	up to 400	
	± 1 °	± 0° 30`	± 0° 20`	± 0° 10`	± 0° 5`	
STRAIGHTNESS AND FLATNESS – ▱	up to 10	10 - 30	30 - 100	100 -300	300 -1000	1000 - 3000
	0,02	0,05	0,1	0,2	0,3	0,4
PERPENDICULARITY ⊥	up to 100	100 - 300	300 -1000	1000 - 3000		
	0,2	0,3	0,4	0,5		
SYMMETRY ⌯	up to 100	100 - 300	300 -1000	1000 - 3000		
	0,5					
RUN-OUT ↗	0,1					

Prüfmaß
check gauge

material:
made of:
coating:

Schramme

scale: 1 : 1 | -

attributes: 1 - 15
deleted attributes:

	date	name
draw.	31.03.2020	PGT
check.	08.04.2020	CML

Backlackspule

Magnetbau Schramme

EG610008016 | 1 | A3

rev.	rev. descr.	date	name

CONFIDENTIAL