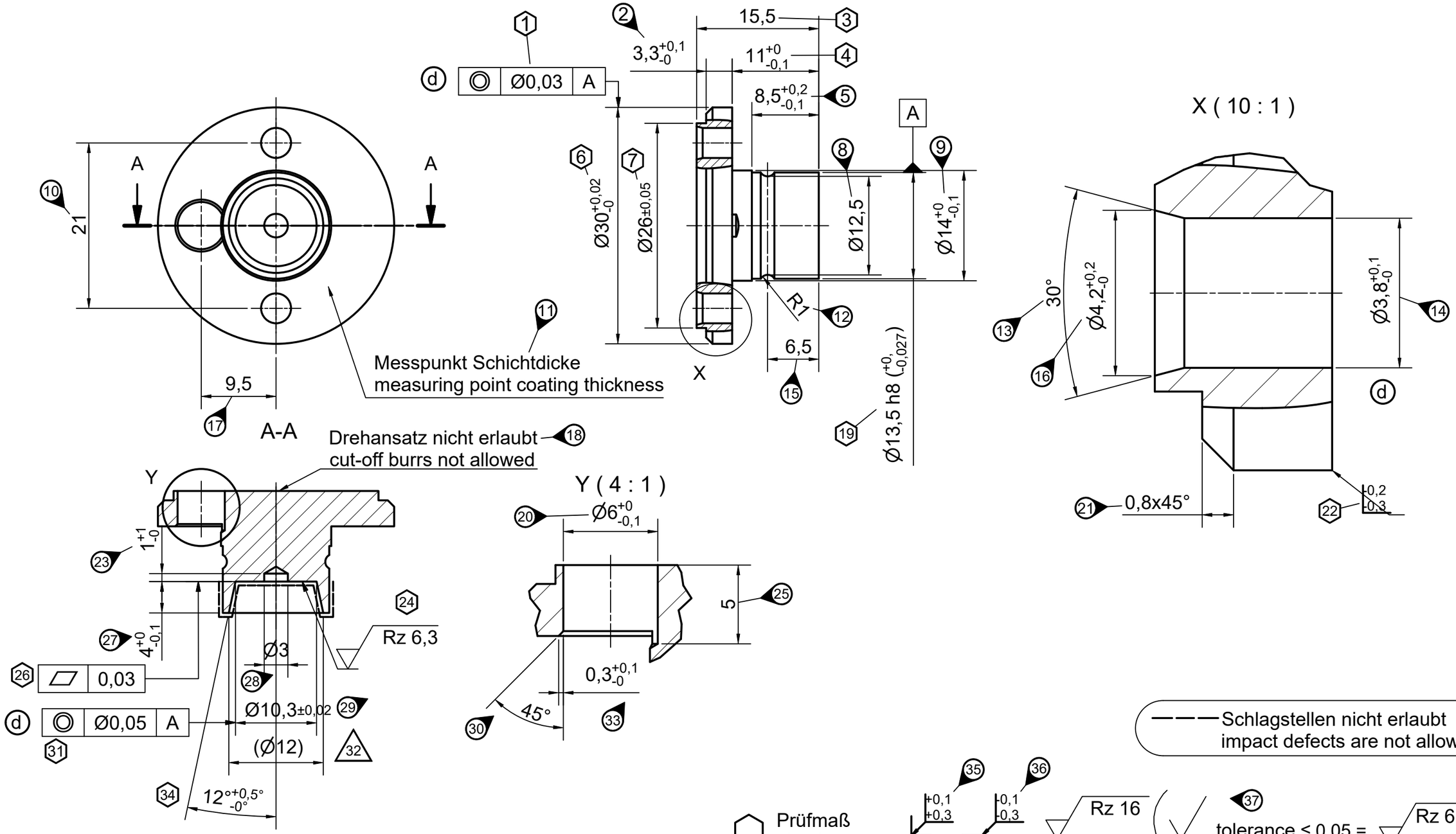

GENERAL TOLERANCE DIN ISO 2768						
LINEAR DIMENSIONS mm	< 0,5	0,5 - 3	3 - 6	6 - 30	30 - 120	120 - 400
	± 0,1	± 0,1	± 0,1	± 0,2	± 0,3	± 0,5
EXTERNAL RADIUS AND CHAMFER HEIGHTS	< 0,5	0,5 - 3	3 - 6	6 - 30	30 - 120	120 - 400
	± 0,1	± 0,2	± 0,5	± 1,0	± 2,0	± 4,0
ANGULAR DIMENSIONS	up to 10	10 - 50	50 - 120	120 - 400	up to 400	
	± 1 °	± 0° 30`	± 0° 20`	± 0° 10`	± 0° 5`	
STRAIGHTNESS AND FLATNESS	up to 10	10 - 30	30 - 100	100 - 300	300 - 1000	1000 - 3000
	0,02	0,05	0,1	0,2	0,3	0,4
PERPENDICULARITY	up to 100	100 - 300	300 - 1000	1000 - 3000		
	0,2	0,3	0,4	0,5		
SYMMETRY	up to 100	100 - 300	300 - 1000	1000 - 3000		
	0,5					
RUN-OUT	0,1					

material: 1.0715
made of:
coating: Fe//Zn5-10//An//T0

Schramme

scale: 2 : 1 | -

attributes:
deleted attributes:

	date	name
draw.	05.07.2011	Allgaier
check.	05.07.2011	Klotz

rev.	rev. descr.	date	name
d	2021_259 (3)	11.03.22	VSR
c	2021_126 (4)	24.02.21	VSR
b	2020_307	13.03.20	VSR
a	drawing international	05.03.19	VSR

Magnetbau Schramme

Dateiname: GL503202014.idw

Konusdeckel beschichtet

GL503202014

1

A3

VERTRAULICH/CONFIDENTIAL